AEC-Q200
Non compliance

⚠ The Specific Precautions

While using below following environments or usage of conditions, there might be caused some failures.Once those failures would be caused, characteristics of product would deteriorate and would not satisfy their specifications especially 2. Ratings, 5. Climatic Performance and 6. Mechanical Performance.

Additionally in the worst case, there would be some failures or burning-out.

Please do not use NTC thermistors under following environments and conditions.

Murata will not assume any of our responsibility in the case of using below environments.

(1) High humidity environment, or in close proximity to splashing water.
A water droplet between the outer electrodes needs to be avoided completely.
(2) Corrosive or deoxidizing gas (Cl_2, H_2S, NH_3, SO_X, NO_X, etc.)
(3) Flux cleaning process after soldering process with non-cleaning flux
(4) Volatile or flammable gas
(5) Dusty environment
(6) Under vacuum, reducing pressure or high-pressure
(7) Place with salt water, oils, chemical liquids or organic solvents
(8) High vibration environment
(9) Other place, That is similar to the above-mentioned environments

(Ex. Resistance abnormality, Short (includes Sn/Ag ion migration), Resistance abnormality, Emit smoke, Ignition, Short, Open)

The Precautions for resistance measurement

Outside temperature influences the resistance value of this product, therefore is important to control the fluctuation of the environment temperature when measuring the resistance value of this product..

- POINT1: Please measure the resistance value without touching a device and a substrate by hand or finger directly.
- POINT2: Please install a thermometer at your measuring place in order to recognize the environmental temperature.

Murata's website explains it by using video in following URL :
http://www.murata.com/en-us/support/faqs/products/thermistor/ntc/pct/0001

(For Example) Resistance value changes
Murata P/N : NCP15XH103F03RC
(Resistance @25°C :10kΩ+/-1%, B-constant : 3380K+/-1%)
Resistance value change approx.4% per 1°C difference around 25°C

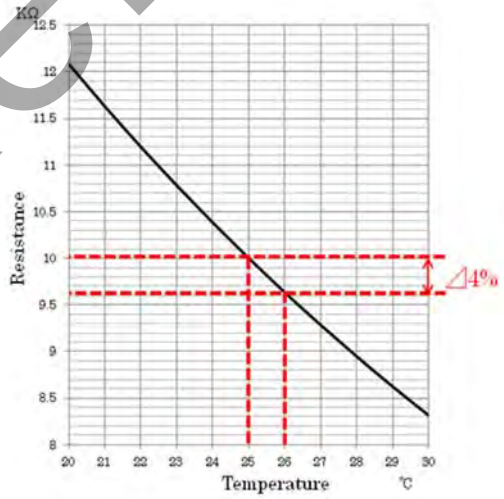

Temp. (°C)	Resist. (k ohm)	Changes %
20	12.081	20.8%
21	11.628	16.3%
22	11.195	12.0%
23	10.780	7.8%
24	10.382	3.8%
25	10.000	0.0%
26	9.634	-3.7%
27	9.284	-7.2%
28	8.947	-10.5%
29	8.624	-13.8%
30	8.315	-16.9%

Reference Only

AEC-Q200
Non compliance

for users

⚠ CAUTION

1. Applying of a voltage exceeding the specified 'Maximum voltage' may causes deterioration. Please use below the maximum voltage of characteristics of this product.

2. Please do not use in the following applications.
Especially high reliability, in order to prevent defects which might directly cause damage to other party's life, body or property. (Listed below.)
(1) Aircraft equipment
(2) Aerospace equipment
(3) Undersea equipment
(4) Power plant control equipment
(5) Medical equipment
(6) Transportation equipment (automobiles, trains, ships, etc.)
(7) Traffic signal equipment
(8) Disaster prevention / Crime prevention equipment
(9) Data-processing equipment
(10) Applications of similar complexity or with reliability requirements comparable to the applications listed in the above

3. Do not use chip NTC Thermistor for the application that require continuous operation under high temperature condition such as base station or data processing center because it may cause deterioration (Ex. resistance abnormality, Short circuit) due to Silver electrochemical migration.

4. Be sure to provide an appropriate fail-safe function on your product to prevent a second damage that may be caused by the abnormal function or the failure of our product.

NOTICE

1. Use this product within the specified temperature range. Higher temperature may cause deterioration of the characteristics or the material quality of this product.

2. Following conditions should be kept in order to avoid deterioration of solderability of external electrodes and the characteristics of this products.
(1) Storage Condition: Temperature: -10°C to +40°C
Humidity: Max. 75 %RH, without dewing.
(2) Storage Term: Use this product within 6 months after delivery.
If 6 months or more elapsed, please check the solderability before use.
(3) Storage Place: Do not store this product in corrosive gas (SO_X, Cl, etc.), nor in direct sunlight

Reference Only

AEC-Q200
Non compliance

3. Solder and Flux
   (1) Solder Paste
   Reflow Soldering : Use RA/RMA type or equivalent type of solder paste.
   For your reference,we are using the solder paste below for any internal tests of this product.
   • RMA9086 90-4-M20(Sn:Pb=63wt%:37wt%)
   (Manufactured by Alpha Metals Japan Ltd.)
   • M705-221BM5-42-11(Sn:Ag:Cu=96.5wt%:3.0wt%:0.5wt%)
   (Manufactured by Senju Metals Industry Co., Ltd.)

   (2) Flux : Use rosin type flux in soldering process.
   Problems with product characteristics or reliability may occur if the below flux is used.
   Please do not use below flux.
   • Strong acidic flux (with halide content exceeding 0.1wt%).
   • Water-soluble flux(*Water-soluble flux can be defined as non rosin type flux including wash-type flux and non-wash-type flux.)

4. For removing the flux after soldering, observe the following points in order to avoid deterioration of the characteristics or any change of the external electrodes quality.
   (1) Cleaning Conditions

Solvent	Dipping Cleaning	Ultrasonic Cleaning
Isopropyl Alcohol	Max. 5 min. at room temp. or Max. 2 min. at 40°C max.	Max. 5 min. 20W/L Frequency of 28 KHz to 40 KHz.

   • Please keep mounted parts and a substrate from an occurance of resonance in ultrasonic cleaning.
   • Please do not clean the products if using a non-washed type flux.

   (2) Drying : Please fully perform cleaning and fully remove flux and cleaning solvents from product.
   After cleaning, promptly dry this product.

5. Do not give this product a strong press-force nor a mechanical shock.
   Such mechanical forces may cause cracking or chipping of this ceramic product.

6. In your mounting process, observe the following points in order to avoid deterioration of the characteristics or destruction of this product. The mounting quality of this product may also be affected by the mounting conditions, shown the points below.
   (1) Please mount this product by soldering. When mounted by other methods, such as conductive adhesives,please contact us in advance.

   (2) Recommended Land Pattern
   Too large of a land pattern will allow too much solder paste at the mounting points.
   This may cause destruction of this product Due to mechanical stress, especially in the case of board bending.

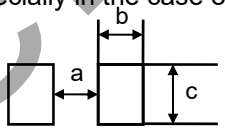

	a	b	c
Reflow Soldering	0.20	0.18	0.23

(Unit : mm)

   (3) Printing Conditions of Solder Paste
   i. Recommendable thickness of solder paste printing shall be 50 μm.
   ii. After soldering, the solder fillet shall be a height from 1/3E to the thickness of this product. (See the figures below.)

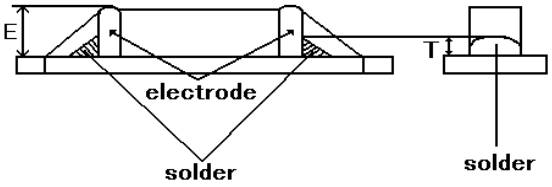

1/3E≦T≦E

   iii. Too much solder will put too much mechanical stress on this product, such stress may cause cracking or mechanical damage. Also, it can deteriorate the electrical performance of this product.

Reference Only

AEC-Q200
Non compliance

(4) Allowable Soldering Temperature and Time

i. Solder within the temperature and time combinations, indicated by the diagonal lines in the following graphs.

ii. Excessive soldering conditions may cause dissolution of metallization or deterioration of solder-wetting on the external electrode.

iii. In case of repeated soldering, the total accumulated soldering time should be within the range shown below figure. (For example, Reflow peak temperature : 260°C, twice → The total accumulated soldering time at 260°C is within 30sec.)

<Allowable Reflow Soldering Temp. and Time>

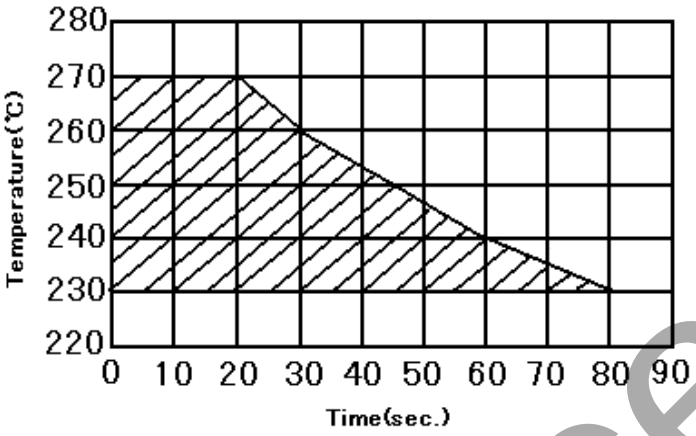

(5) Recommended Temperature Profile for Soldering

i. Insufficient preheating may cause a crack on ceramic body. The difference between preheating temperature and soldering temperature shall be less than 100°C.

ii. Insufficient soldering temperature may cause deterioration of solder-wetting on the External electrode. The soldering temperature of reflow soldering shall be from 240°C to 270°C.

iii. Rapid cooling by dipping in solvent or by other means is not recommended.

If you can not use the above-mentioned conditions, please evaluate if this product is correctly mounted under your mounting and soldering conditions.

Recommended Soldering Condition

<Reflow Soldering Condition>

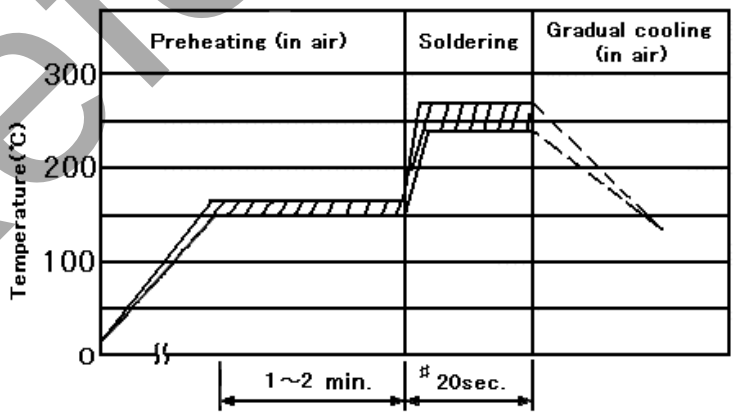

Preheating: 160 +/- 10 °C
1min. ~ 2 min.
Soldering: 240 °C~270°C
20sec.

#: In case of repeated soldering, the total accumulated soldering time should be within the range shown above figure (4).

Reference Only

AEC-Q200
Non compliance

(6) There is a Risk of unexpected failures (tombstone, insufficient solder-wetting, etc.) in your mounting process, caused by the mounting conditions. Please evaluate if this product is correctly mounted under your mounting conditions.

(7) Reworking Conditions with Soldering Iron
The following conditions must be strictly followed using a soldering iron.

Item	Conditions
Preheating	at 150°C for 1 to 2 minute
Temperature of Iron-tip	280 °C max.
Soldering Iron Wattage	20W max.
Diameter of Iron-tip	3mm dia. max.
Soldering Time	10sec. max.
Caution	Do not allow the iron-tip to directly touch the ceramic body.

(8) Printed Circuit Board (PC Board) and Thickness
Since a crack may be caused by mechanical stress like bending, please use a glass epoxy board (FR-4) or equivalent type and a thickness 0.8tmm or below.

(9) Notes about solder mounting
NCP02 type is a very small chip component, Size 0.4mmx 0.2mm. It is very sensitive to mechanical and thermal stress. Excess solder fillet height can multiply these stresses and cause chip cracking. When designing substrates, take land patterns and dimensions into consideration to eliminate the possibility of excess solder fillet height.
There is a possibility of chip cracking caused by PCB bending and expansion/contraction with heat such as reflow soldering, because stress on a chip changes depending on PCB material and structure. When the thermal expansion coefficient greatly differs between the board used for mounting and the chip, it will cause cracking of the chip due to the thermal expansion and contraction.
When the chip is mounted on a fluorine resin printed circuit board or on a single-layered glass epoxy board, it may also cause cracking of the chip for the same reason. Please consider abnormalities in the mounting process in your evaluation.

7. Location on Printed Circuit Board(PC Board)

<Component Direction>
Locate this product horizontal to the direction in which stress acts.

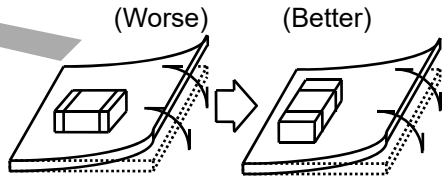

<Mounting Close to Board Separation Line>
Put this product on the PC Board near the Slit, not near the Perforation Holes.
Keep this product on the PC Board away from the Separation Line.

Worst ← "A"-"C"-"B"-"D" → Better

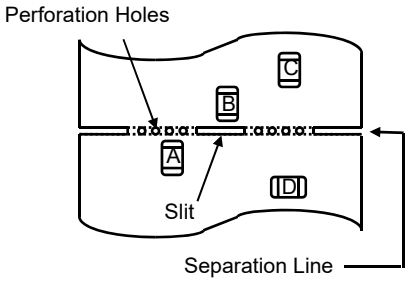

Reference Only

AEC-Q200
Non compliance

⚠ NOTE

1. Please make sure that your product has been evaluated for your specifications with our product being mounted to your product.

2. Do not use our product deviating from this product specification.

3. Please return one duplicate of this product specification to us with your signature to aknowledge your receipt. If the duplicate is not returned by appointed day, the product specification will be deemed to have been received by you.

4. We consider it not appropriate to include any terms and conditions with regard to the business transaction in the product specifications, drawings or other technical documents. Therefore, if your technical documents as above include such terms and conditions such as warranty clause, product liability clause, intellectual property infringement liability clause, or export control clause, they will be deemed to be invalid.

Reference Only

AEC-Q200
Non compliance

NTC Thermistor SPECIFICATION

Scope
This product specification is applied to NTC Thermistor used for temperature sensor and temperature compensation.
Please contact us when using this product for any other applications than described in the above.

1.Part No.

NCP02XH103D05RH

2.Ratings

No.	Item	Specification	Condition
2.1	Resistance	10k ohm ±0.5%	at 25°C, zero-power resistance (*1)
2.2	B-constant	3380K ±0.5%	B-constant is calculated by zero-power resistance of Thermistor in 25°C and 50°C. (*2)
2.3	Maximum operating current	0.100mA	at 25°C in still air (*1,*3)
2.4	Maximum voltage	5.00 V	at 25°C in still air (*4)
2.5	Thermal Dissipation Constant	Approx. 1.0mW/°C	at 25°C in still air (*1)
2.6	Operating temperature Range	-40~+125°C	
2.7	Graph of maximum operating voltage	①	(*5)

*1 : NTC thermistor is measured at 25°C in still air, as a single unit without mounting.
*2 : B-constant is a constant representing the resistance temperature characteristic of NTC thermistor.
*3 : NTC Thermistor raises 0.1°C more by maximum operating current.
*4 : Voltage range shown on Fig next page, can keep NTC Temperature less than 0.1°C rise.
*5 : Voltage at which self-heating becomes 0.1°C when applied to an unmounted NTC thermistor
Please use NTC Thermistor by lower voltage than the maximum operating voltage curve.

Please consult with us on off-specification usage.

Reference Only

AEC-Q200
Non compliance

Graph of Maximum Operating Voltage Reduction Characteristics

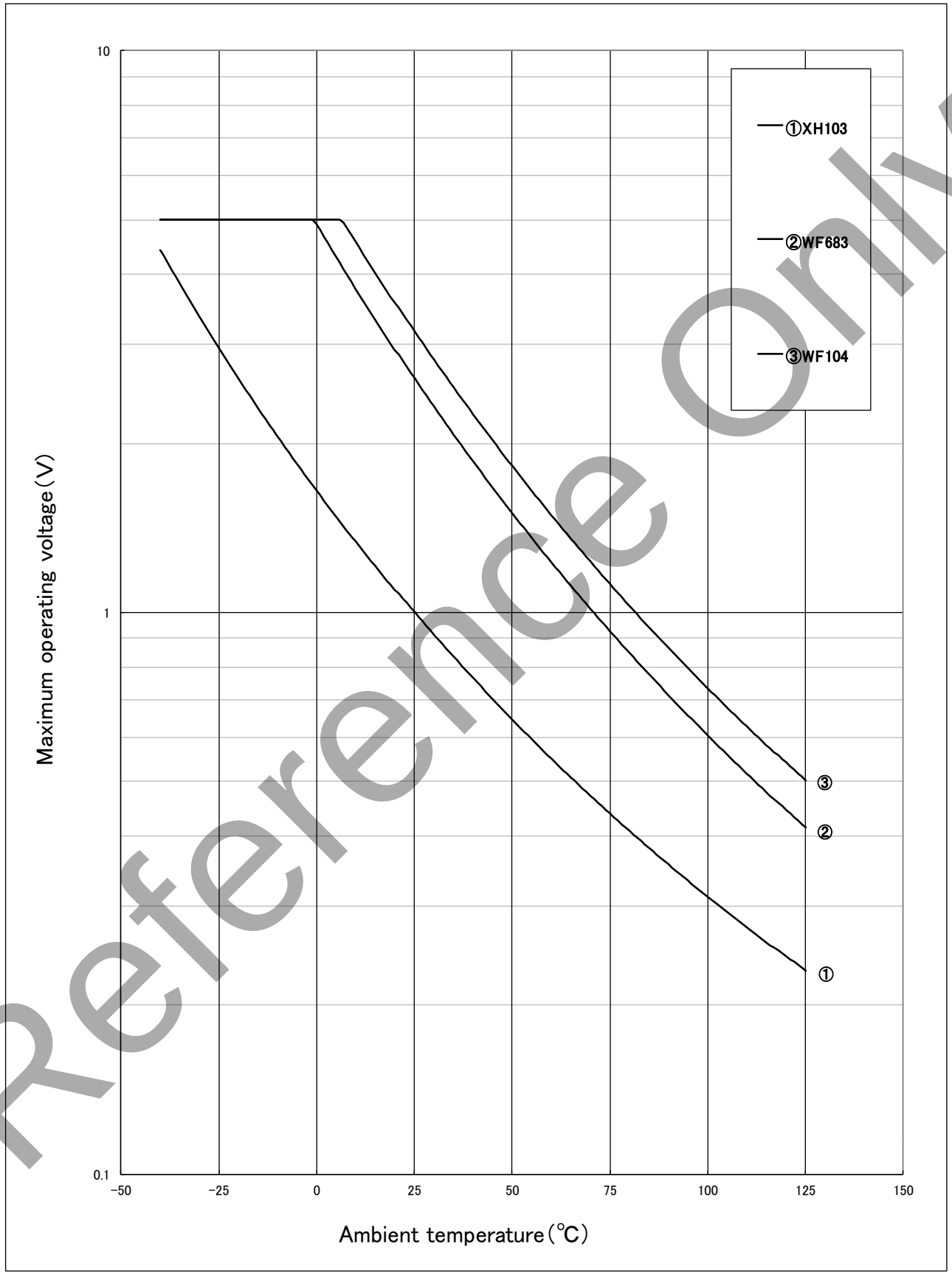

Reference Only

AEC-Q200
Non compliance

3.Dimensions

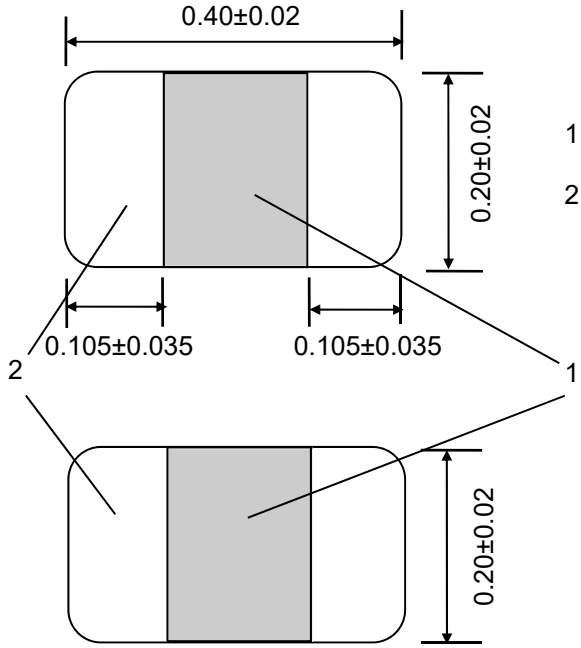

1.Thermistor

2.Electrode (Ag System + Ni Plating + Sn Plating)

(Unit : mm)

4.Marking

No Marking

5.Climatic performance

No.	Item	Criteria	Test Condition
5.1	Dry Heat	•Resistance(R_{25}) change shall be less than ±3% •B-constant($B_{25/50}$) change shall be less than ±1% •No visible damage.	125±3°C in air, for 1000 +48/-0 hrs. without loading.
5.2	Cold		-40±3°C in air, for 1000 +48/-0 hrs. without loading.
5.3	Damp Heat		60±2°C, 90~95%RH in air, for 1000 +48/-0 hrs. without loading.
5.4	Change of Temperature		5 cycles of following sequence without loading. Step Temp.(°C) Time (min.) 1 -40 +0/-3 30 2 room temp. 10~15 3 +125 +3/-0 30 4 room temp. 10~15
5.5	High Temperature Load		85±2°C in air, with Maximum Operating Current (D.C. 0.100mA) for 1000 +48/-0 hrs.

- NTC Thermistor shall be soldered on the glass epoxy PCB with “Recommendable Land Size” (See Notice 6. (2)) and be tested.
- R_{25} means the zero-power resistance at 25°C.
- $B_{25/50}$ is calculated by the zero-power resistances of NTC Thermistor at 25°C and at 50°C.
- After each test, NTC Thermistor should be kept for 1 hour at room temperature (normal humidity and normal atmospheric pressure). Then the resistances (R_{25} and R_{50}) shall be measured and the appearance shall be visually examined.

Reference Only

AEC-Q200
Non compliance

6.Mechanical performance

No.	Item	Criteria	Test Condition
6.1	Solderability	Minimum 95% of the whole electrode surface shall be covered with solder.	Soldering Temp. : 245±5°C Solder : Sn-3.0Ag-0.5Cu Immersion Time : 3±0.5sec. NTC Thermistor shall be immersed completely under the solder meniscus.
6.2	Soldering Heat Resistant	•Resistance(R_{25}) change shall be less than ±3% •B-constant($B_{25/50}$) change shall be less than ±1% •No visible damage.	Soldering Temp. : 260±5°C Solder : Sn-3.0Ag-0.5Cu Immersion Time : 10±0.5sec. NTC Thermistor shall be immersed completely under the solder meniscus. Preheating Temp.: 150±5°C Preheating Time : 3min.
6.3	Vibration Resistant	•Resistance(R_{25}) change shall be less than ±3% •B-constant($B_{25/50}$) change shall be less than ±1% •No visible damage.	Solder NTC Thermistor on the Glass Epoxy PCB as shown below. Frequency : 10Hz~55Hz~10Hz(1min.) Amplitude : 1.5mm Vibrated for a period of 2hrs. in three (3) directions perpendicularly intersecting each other (for total of 6hrs.). 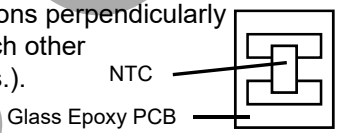
6.4	Resistance to Bending of Substance	•Resistance(R_{25}) change shall be less than ±3% •B-constant($B_{25/50}$) change shall be less than ±1% •No visible damage.	Solder NTC Thermistor on Test Board, and apply force on back side of Test Board as shown below: Bending Speed : 1.0 mm/s Bending Strength : 1.0mm Hold Time : 5+/-1 sec Board Dimension : 100*40*0.8t mm Board Material : Glass Epoxy 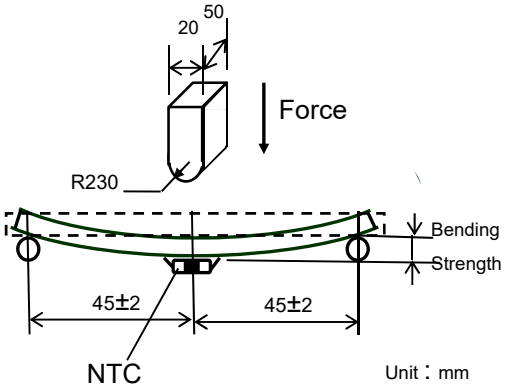

- NTC Thermistor shall be soldered on the glass epoxy PCB with “Recommendable Land Size” (See Notice 6. (2)) and be tested. (No. 6.3,6.4)
- R_{25} means the zero-power resistance at 25°C.
- $B_{25/50}$ is calculated by the zero-power resistances of NTC Thermistor at 25°C and at 50°C.
- After each test, NTC Thermistor should be kept for 1 hour at room temperature (normal humidity and normal atmospheric pressure). Then the resistances (R_{25} and R_{50}) shall be measured and the appearance shall be visually examined.

Reference Only

AEC-Q200
Non compliance

7. Taping Specification

7.1 Dimensions of paper tape

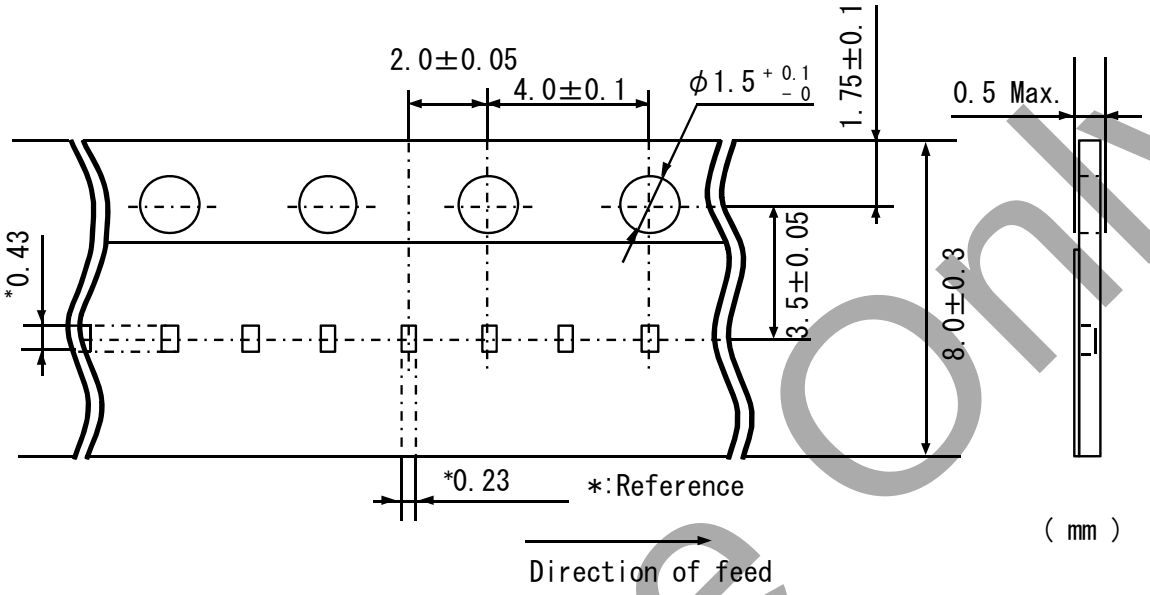

(1) NTC Thermistors shall be packaged in the each cavity of base tape and sealed by cover tape

(2) Cover tape has no joints. And products shall be packaged and sealed in the cavity of plastic tape, continuously.

7.2 Tape strength

(1) Pull strength of cover tape and base tape shall be specified as follows:

Cover tape	Base tape
10N minimum	10N minimum

(2) Peeling force of cover tape

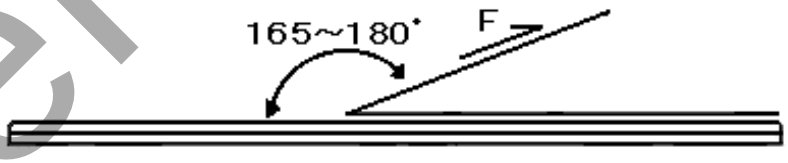

*1 Peeling angle : 165 to 180 degree against the fixed surface of tape.
*2 Peeling speed : 300mm/min.
*3 Peeling force : 0.1 ~ 0.6 N

Reference Only

AEC-Q200
Non compliance

7.3 Reeling

(1) Quantity (Standard Quantity)

Products quantity in a reel
20,000 pcs./1 reel

(2) A tape in a reel contains Leader unit and Trailer unit where products are not packed.
(See the following figure.)

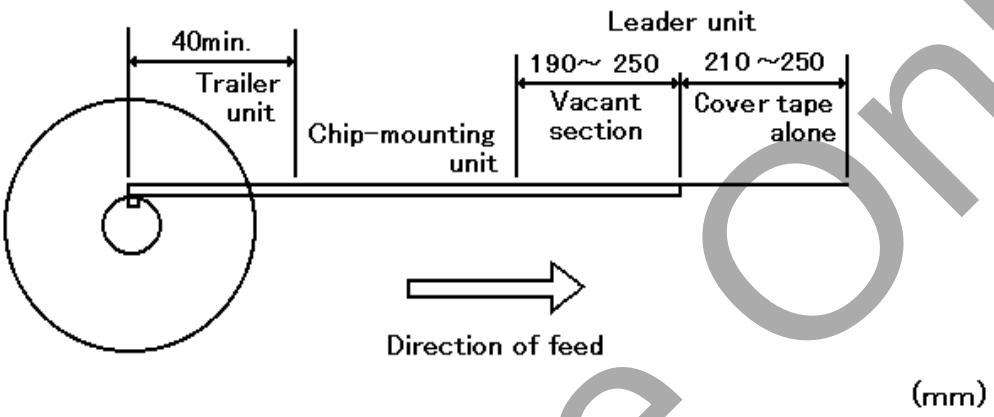

The reeling specification above shall not be applied for the order less than 20,000pcs.

(3) The cover tape and base tape are not attached at the end of the tape (Vacant section) for a minimum of 5 pithes.

(4) A label shall be attached on the reel. (MURATA's part number, inspection number and quantity shall be marked on the label.)

(5) Dimensions of reel

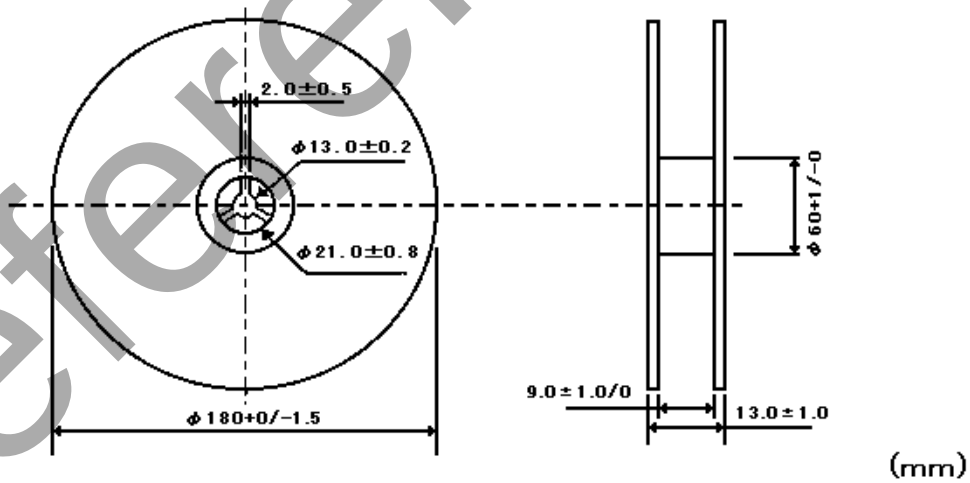

8.Packaging

The reeling shall be packed in a package.
The label shall be attached on the package.
(Customer's name, order number, customer's part number, MURATA's part number and quantity shall be marked on a label.)

Reference Only